DIEXA S.A.

Reductores y motor-reductores serie TP

- Motor-reductores con motor electrico asincrono de rotor conico y freno incorporado
- Amplia gama de velocidades de revolucion y momentos de torsion
- IP 54, IP 22 del freno (EN 60529)
- Ejecucion con brida - IM B5 (EN60034-7)
- Opcion de dotar proteccion termica o proteccion antideflagrante
- Variantes segun la potencia del motor
- Modificaciones de tension alimentar

Aplicacion: Para accionar gruas y otros mecanismos de traslacion

Reducer and geared motors TP series

- Geared motor groups including asynchronous brake motors with conical rotor
- Wide range of output speeds and output torques according to client requirements
- IP 54, brake protection IP 22 (EN 60529)
- Flange joining-IM B5 (EN 60034-7)
- Optional thermal or explosion-proof protection
- Modifications by electric motor power
- Different supply voltages on request

Applications: For travelling mechanisms of cranes and other lifting systems

Motor-reductor

Avda. La Ferreria, nº 72 Polig. Ind. "LA FERRERIA" 08110 MONTCADA I REIXAC (Barcelona)
Tels.: 935 645 111 - 935 645 312 Fax: 935 752 631
e-mail: INFO@diexsa.es , www.diexsa.es

Motor-reductor

Reductor con brida / Reducer with flange

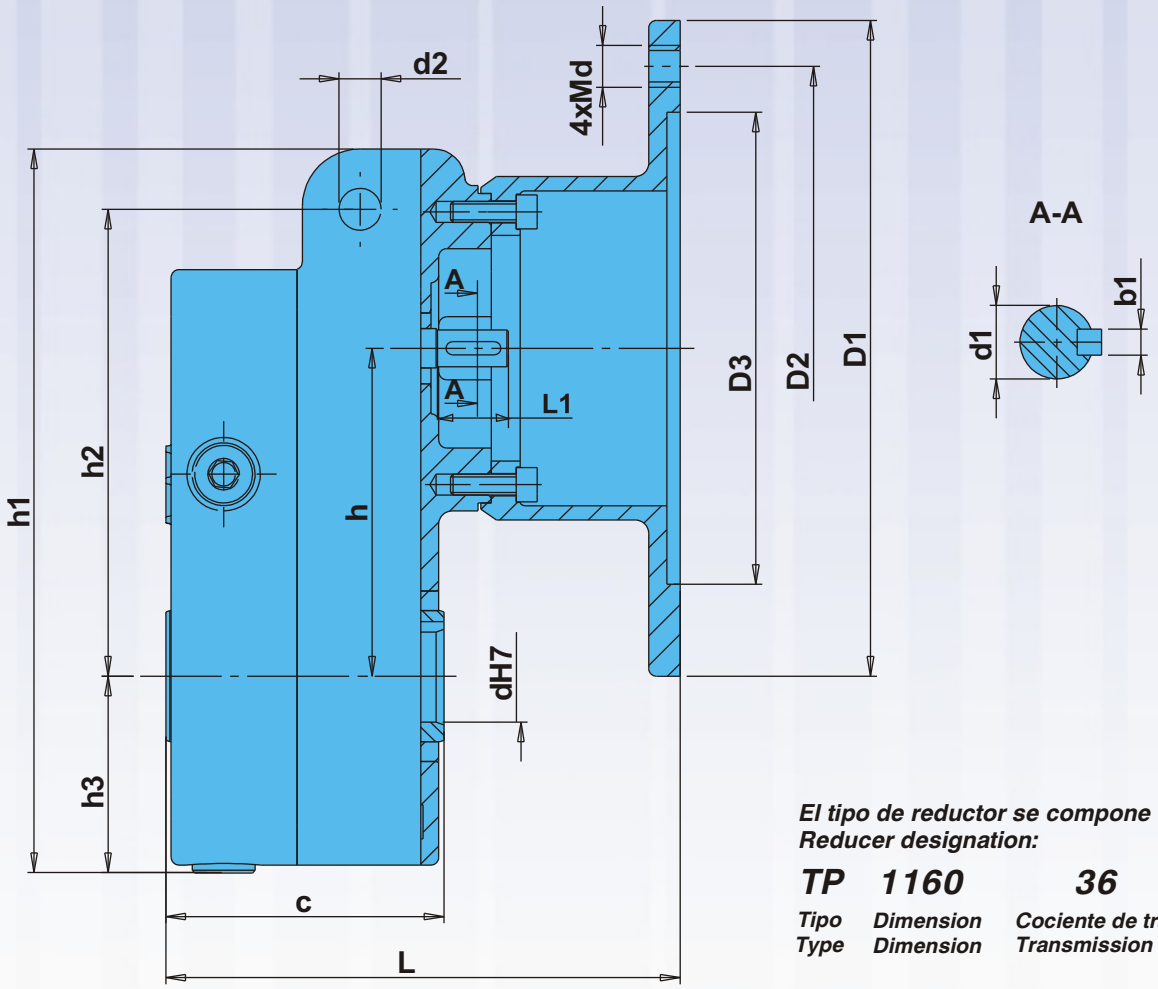

El tipo de reductor se compone de:
Reducer designation:

TP	1160	36
Tipo Type	Dimension Dimension	Cociente de transmision Transmission ratio

Dimensiones generales / Overall dimensions

Tipo de reductor Reducer type	para tipo de motor for motor type	c	L	L1	d2	h	h1	h2	h3	4xMd	D1	D2	D3	d1	u
TP 1160	AK 71	97	150,5	22	16	100	241	150	68	4xM8	160	130	110	11	4
	AK 80		170,5							4xM10	200	165	130		
	AK 90														
TP 1200	AK 71	106	159,5	27	16	125	289	178	81	4xM8	160	130	110	14	5
	AK 80		184							4xM10	200	165	130		
	AK 90		196												
	AK 100									4xM12	250	215	180		
TP 1250	AK 90	118	198	27	18	145	336	207	97	4xM10	200	165	130	16	5
	AK 100		210							4xM12	250	215	180		
TP 1315	AK 90	142	221	28	22	174	383	244	106	4xM10	200	165	130	19	6
	AK 100		233							4xM12	250	215	180		

Motor-reductor / Geared motor

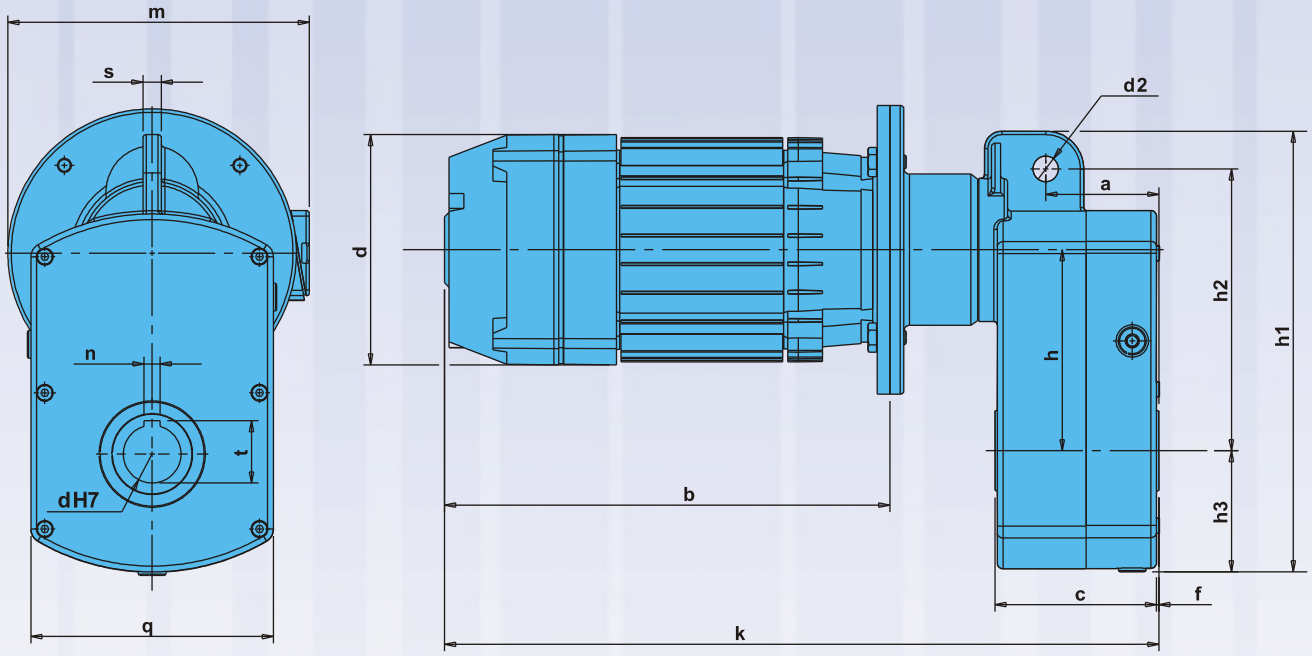

Dimensiones generales / Overall dimensions

Tipo/Type	a	b	c	d	f	k	m	q	s	d2	h	h1	h2	h3	dH7	n	t
TP 1160 AK71		255		150		406	200										
TP 1160 AK80	67.5	262	97	160	1.5	431	220	132	14	16	100	241	150	68	30	8	33.3
TP 1200 AK90		290		178		460	230										
TP 1200 AK70		255		150		414	200										
TP 1200 AK80	75	262	106	160	2	440	220	155	16	16	125	289	178	81	35	10	38.3
TP 1200 AK80P		272		178		450	230										
TP 1200 AK90		290		178		470	230										
TP 1250 AK80P		272		160		470	220										
TP 1250 AK90	78	290	118	180	2	488	230	185	18	18	145	336	207	97	40	12	43.3
TP 1250 AK90P		320		180		518	230										
TP 1315 AK 90P		320		178		550	230										
TP 1315 AK 100	98	340	142	200	2	570	240	210	14	22	174	383	244	106	50	14	54
TP 1315 AK 100P		370		200		600	240										

TAMPON / SEAL

Dimensiones generales / Overall dimensions

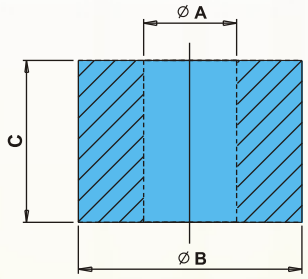

Tipo de reductor Reducer type	Ø A	Ø B	C
---	mm	mm	mm
TP 160 / TP 160	14	41	30
TP 200 / TP 200			
TP 250 / TP 250	17	50	40
TP 315	21	50	40

MOTOR-REDUCTOR /GEARED MOTOR
TP 1160 Mmax - 250Nm
2p= 8/2 - 660/2700 min^{-1}; 2p= 12/4 - 455/1420 min^{-1}; 2p= 4 - 1420 min^{-1}.

Tipo/Type	Potencia / Power	Cociente de transmision / Transmission Ratio	Revoluciones de salida / Output Speed	Momento tors. de salida / Output Torque	Factor de servicio / Service Factor
	kW		min^{-1}	Nm	f_s
TP1160 79 AK71B4	0.25	79.08	16.44	137.83	1.81
TP1160 79 AK71B8/2	0.06/0.25		8.34/34.14	65.15/77.90	3.84/3.21
TP1160 79 AK71-8/2	0.06/0.30		8.34/34.14	65.15/93.48	3.84/2.67
TP1160 79 AK80B8/2	0.08/0.25		5.69/17.70	127.41/127.98	1.96/1.95
TP1160 70 AK71B4	0.25	69.89	18.60	121.80	2.05
TP1160 70 AK71B8/2	0.06/0.25		9.44/38.63	57.58/68.85	4.34/3.63
TP1160 70 AK71-8/2	0.06/0.30		9.44/38.63	57.58/82.61	4.34/3.03
TP1160 70 AK80B12/4	0.08/0.25		6.44/20.03	112.61/113.11	2.22/2.21
TP1160 64 AK71B4	0.25	63.72*	20.40	111.05	2.25
TP1160 64 AK71B8/2	0.06/0.25		10.35/42.37	52.50/62.77	4.76/3.98
TP1160 64 AK71-8/2	0.06/0.30		10.35/42.37	52.50/75.32	4.76/3.32
TP1160 64 AK80B12/4	0.08/0.25		7.06/21.97	102.66/103.13	2.43/2.42
TP1160 56 AK71-4	0.37	56.31	23.08	145.25	1.72
TP1160 56 AK80-12/4	0.12/0.37		7.81/24.68	139.18/135.84	1.80/1.84
TP1160 49 AK71-4	0.37	48.69	26.69	125.57	1.99
TP1160 49 AK80-12/4	0.12/0.37		9.04/28.55	120.35/117.46	2.08/2.13
TP1160 47 AK71-4	0.37	46.63	27.88	120.26	2.08
TP1160 47 AK80-12/4	0.12/0.37		9.44/29.81	115.25/112.49	2.17/2.22
TP1160 43 AK71-4	0.37	43.41*	29.25	111.95	2.23
TP1160 43 AK80-12/4	0.12/0.37		10.14/32.02	107.30/104.72	2.33/2.39
TP1160 39 AK80-4	0.55	39.23	34.41	144.85	1.7
TP1160 39 AK80P12/4	0.18/0.55		11.22/35.69	145.45/139.68	1.72/1.79
TP1160 36 AK80-4	0.55	35.95*	37.55	132.74	1.88
TP1160 36 AK80P12/4	0.18/0.55		12.24/38.94	133.29/128.00	1.87/1.95
TP1160 33 AK80-4	0.55	33.04	40.86	121.99	2.05
TP1160 33 AK80P12/4	0.18/0.55		13.32/42.37	122.50/117.64	2.04/2.12
TP1160 30 AK80-4	0.55	30.25	44.63	111.69	2.24
TP1160 30 AK80P12/4	0.18/0.55		14.55/46.28	112.15/107.70	2.23/2.32
TP1160 29 AK90-12/4	0.25/0.75	28.66*	15.00/49.20	151.00/138.16	1.66/1.81
TP1160 28 AK90-12/4	0.25/0.75	27.87*	15.43/50.29	146.85/134.35	1.70/1.86
TP1160 22 AK90-12/4	0.25/0.75	22.09	19.46/63.83	116.40/106.49	2.15/2.35
TP1160 20 AK90-4	1.1	20.19	68.85	144.80	1.73
TP1160 20 AK90P12/4	0.37/1.1		20.80/69.84	161.19/142.75	1.55/1.75
TP1160 16 AK90-4	1.1	16.26	85.49	116.62	2.14
TP1160 16 AK90P12/4	0.37/1.1		25.83/86.72	129.82/114.96	1.92/2.17
TP1160 13 AK90P4	1.5	12.54	110.84	122.64	2.04

* cocientes de transmision recomendados / recommended transmission ratios

MOTOR-REDUCTOR /GEARED MOTOR
TP 1200 Mmax - 500Nm
2p= 12/4 - 455/1420 min^{-1}; 2p= 4 - 1420 min^{-1}.

Tipo/Type	Potencia / Power	Cociente de transmision / Transmission Ratio	Revoluciones de salida / Output Speed	Momento tors. de salida / Output Torque	Factor de servicio / Service Factor
	kW		min^{-1}	Nm	f_s
TP1200 84 AK71-4	0.37	84.40*	15.40	217.7	2.30
TP1200 84 AK80-12/4	0.12/0.37		5.21/16.47	208.6/203.6	2.40/2.46
TP1200 70 AK80P12/4	0.18/0.55	69.56	6.32/20.13	257.9/247.7	1.94/2.02
TP1200 57 AK80P4	0.75	57.29	24.44	278.15	1.80
TP1200 57 AK90-12/4	0.25/0.75		7.51/24.6	301.9/276.2	1.66/1.81
TP1200 54 AK80P4	0.75	53.74*	26.05	260.9	1.92
TP1200 54 AK90-12/4	0.25/0.75		8.0/26.24	283.2/259.1	1.76/1.93
TP1200 50 AK80P4	0.75	49.65	28.20	241.06	2.07
TP1200 50 AK90-12/4	0.25/0.75		8.66/28.40	261.6/239.4	1.91/2.09
TP1200 50 AK90PB12/4	0.3/0.9		8.46/28.40	321.0/287.2	1.56/1.74
TP1200 44 AK80P4	0.75	44.29*	31.61	215.0	2.32
TP1200 44 AK90-12/4	0.25/0.75		9.70/31.84	233.0/213.5	2.14/2.34
TP1200 44 AK90PB12/4	0.3/0.9		9.48/31.84	286.7/256.2	1.56/1.74
TP1200 43 AK80P4	0.75	42.70	32.79	207.3	2.41
TP1200 43 AK90-12/4	0.25/0.75		10.07/33.02	225.0/205.8	2.22/2.43
TP1200 43 AK90PB12/4	0.3/0.9		9.84/33.02	276.4/247.0	1.80/2.02
TP1200 41 AK80P4	0.75	40.92	34.21	198.7	2.52
TP1200 41 AK90-12/4	0.25/0.75		10.50/34.46	215.6/197.3	2.32/2.53
TP1200 41 AK90PB12/4	0.3/0.9		10.26/34.46	265.0/237.0	1.89/2.11
TP1200 40 AK90-4	1.1	39.72	34.74	286.9	1.74
TP1200 40 AK90PB12/4	0.3/0.9		10.57/35.5	257.0/229.8	1.94/2.18
TP1200 40 AK90P12/4	0.37/1.1		10.57/35.5	317.1/280.8	1.57/1.78
TP1200 35 AK90-4	1.1	35.19*	39.26	253.9	1.97
TP1200 35 AK90PB12/4	0.3/0.9		11.95/40.11	227.5/203.3	2.20/2.46
TP1200 35 AK90P12/4	0.37/1.1		11.95/40.11	280.6/248.5	1.78/2.01
TP1200 32 AK90-4	1.1	32.27*	42.76	233.1	2.14
TP1200 32 AK90PB12/4	0.3/0.9		13.02/43.70	209.0/186.7	2.39/2.68
TP1200 32 AK90P12/4	0.37/1.1		13.02/43.70	257.7/228.2	1.94/2.19
TP1200 27 AK90P4	1.5	26.60*	51.88	262.0	1.90
TP1200 27 AK100-12/4	0.5/1.5		15.04/52.63	301.0/258.0	1.66/1.94
TP1200 25 AK90P4	1.5	24.82	55.60	244.5	2.04
TP1200 25 AK100-12/4	0.5/1.5		16.12/56.40	281.2/241.0	1.78/2.07
TP1200 22 AK90P4	1.5	21.84*	63.19	215.2	2.04
TP1200 22 AK100-12/4	0.5/1.5		18.32/64.1	247.4/212.0	2.02/2.36
TP1200 18 AK100-4	2.2	18*	77.22	258.2	1.94
TP1200 18 AK100P12/4	0.75/2.2		22.2/77.78	305.9/256.0	1.63/1.95

* cocientes de transmision recomendados / recommended transmission ratios

MOTOR-REDUCTOR /GEARED MOTOR
TP 1250 Mmax - 800Nm
2p= 12/4 - 455/1420 min^{-1}; 2p= 4 - 1420 min^{-1}.

Tipo/Type	Potencia / Power	Cociente de transmision / Transmission Ratio	Revoluciones de salida / Output Speed	Momento tors. de salida / Output Torque	Factor de servicio / Service Factor
	kW		min^{-1}	Nm	f_s
TP1250 88 AK90-12/4	0.25/0.75	87.53	4.91/16.11	461/422	1.73/1.9
TP1250 72 AK90-12/4	0.25/0.75	72.30*	5.95/19.50	381/348	2.10/2.3
TP1250 66 AK90-12/4	0.25/0.75	65.82	6.53/21.42	347/317	2.30/2.52
TP1250 61 AK90-4	1.1	60.87	22.67	440	1.82
TP1250 61 AK90P12/4	0.37/1.1		6.90/23.16	486/430	1.65/1.86
TP1250 54 AK90-4	1.1	54.37*	25.38	393	2.04
TP1250 54 AK90P12/4	0.37/1.1		7.72/25.93	434/384	1.84/2.08
TP1250 52 AK90-4	1.1	51.99	26.54	376	2.13
TP1250 52 AK90P12/4	0.37/1.1		8.08/27.12	415/368	1.93/2.18
TP1250 48 AK90-4	1.1	48.24	28.61	348	2.30
TP1250 48 AK90P12/4	0.37/1.1		8.71/29.23	385/341	2.08/2.35
TP1250 46 AK90P4	1.5	45.78*	30.14	451	1.77
TP1250 46 AK100-12/4	0.5/1.5		8.74/30.58	519/444	1.54/1.80
TP1250 39 AK90P4	1.5	39.09	35.30	385	2.08
TP1250 39 AK100-12/4	0.5/1.5		10.23/35.81	443/380	1.80/2.10
TP1250 36 AK90P4	1.5	36.28*	38	357	2.24
TP1250 36 AK100-12/4	0.5/1.5		11.02/38.59	411/352	1.95/2.27
TP1250 27 AK100-4	2.2	26.59*	51.90	384	2.08
TP1250 27 AK100P12/4	0.75/2.2		15.04/52,65	452/379	1.77/2.11
Tp1250 20 AK100P4	3.0	20	69.50	391	2.05
TP1250 16 AK100P4	3.0	15.71	88.48	307	2.60

* cocientes de transmision recomendados / recommended transmission ratios

MOTOR-REDUCTOR /GEARED MOTOR
TP 1315 Mmax - 1200Nm
2p= 12/4 - 455/1420 min^{-1}; 2p= 4 - 1420 min^{-1}.

Tipo/Type	Potencia / Power	Cociente de transmision / Transmission Ratio	Revoluciones de salida / Output Speed	Momento tors. de salida / Output Torque	Factor de servicio / Service Factor
	kW		min^{-1}	Nm	f_s
TP1315 86 AK90P12/4	0.37/1.1	86.03	4.88/16.39	680.6/602.5	1.76/1.77
TP1315 78 AK90P12/4	0.37/1.1	77.86	5.39/18.11	616.2/545.3	1.94/2.2
TP1315 71 AK90P4	1.5	70.56*	19.56	695.12	1.73
TP1315 71 AK100-12/4	0.5/1.5		5.95/19.98	754.4/673.9	1.59/1.78
TP1315 65 AK90P4	1.5	65.07	21.21	641	1.87
TP1315 65 AK100-12/4	0.5/1.5		6.45/21.67	695.9/621.4	1.72/1.93
TP1315 60 AK90P4	1.5	59.83	23.07	589.39	2.04
TP1315 60 AK100-12/4	0.5/1.5		7.02/23.57	639.4/571.3	1.88/2.10
TP1315 58 AK90P4	1.5	58.89*	23.43	580.15	2.07
TP1315 58 AK100-12/4	0.5/1.5		7.13/23.94	629.5/562.5	1.91/2.13
TP1315 54 AK90P4	1.5	54.15	25.48	533.46	2.25
TP1315 54 AK100-12/4	0.5/1.5		7.76/26.04	578.4/517.1	2.07/2.32
TP1315 51 AK90P4	1.5	51.10	27.01	503.41	2.38
TP1315 51 AK100-12/4	0.5/1.5		8.22/27.59	546.0/488.0	2.20/2.46
TP1315 46 AK100-4	2.2	46.24	29.84	668.8	1.79
TP1315 46 AK100P12/4	0.75/2.2		9.08/30.49	741.5/647.7	1.62/1.85
TP1315 45 AK100-4	2.2	44.98*	30.68	650.5	1.84
TP1315 45 AK100P12/4	0.75/2.2		9.34/31.35	720.85/630.0	1.66/1.90
TP1315 41 AK100-4	2.2	41.35*	33.37	598.1	2.01
TP1315 41 AK100P12/4	0.75/2.2		10.16/34.10	662.7/579.2	1.81/2.07
TP1315 35 AK100P4	3.0	35.32*	39.35	684.4	1.75
TP1315 35 AK100P12/4	0.75/2.2		11.89/39.92	566.25/494.7	2.12/2.42
TP1315 30 AK100P4	3.0	29.60	46.96	573.5	2.09
TP1315 30 AK100P12/4	0.75/2.2		14.19/47.64	474.5/414.6	2.53/2.89
TP1315 27 AK100P4	3.0	26.79*	51.88	519.1	2.31
TP1315 27 AK100P12/4	0.75/2.2		15.68/52.63	429.4/375.2	2.79/3.20
TP1315 20 AK100P4	3.0	20.46	67.94	396.4	3.03
TP1315 20 AK100P12/4	0.75/2.2		20.53/68.91	327.9/286.6	3.66/4.19

* cocientes de transmision recomendados / recommended transmission ratios

February 2009
Adis design